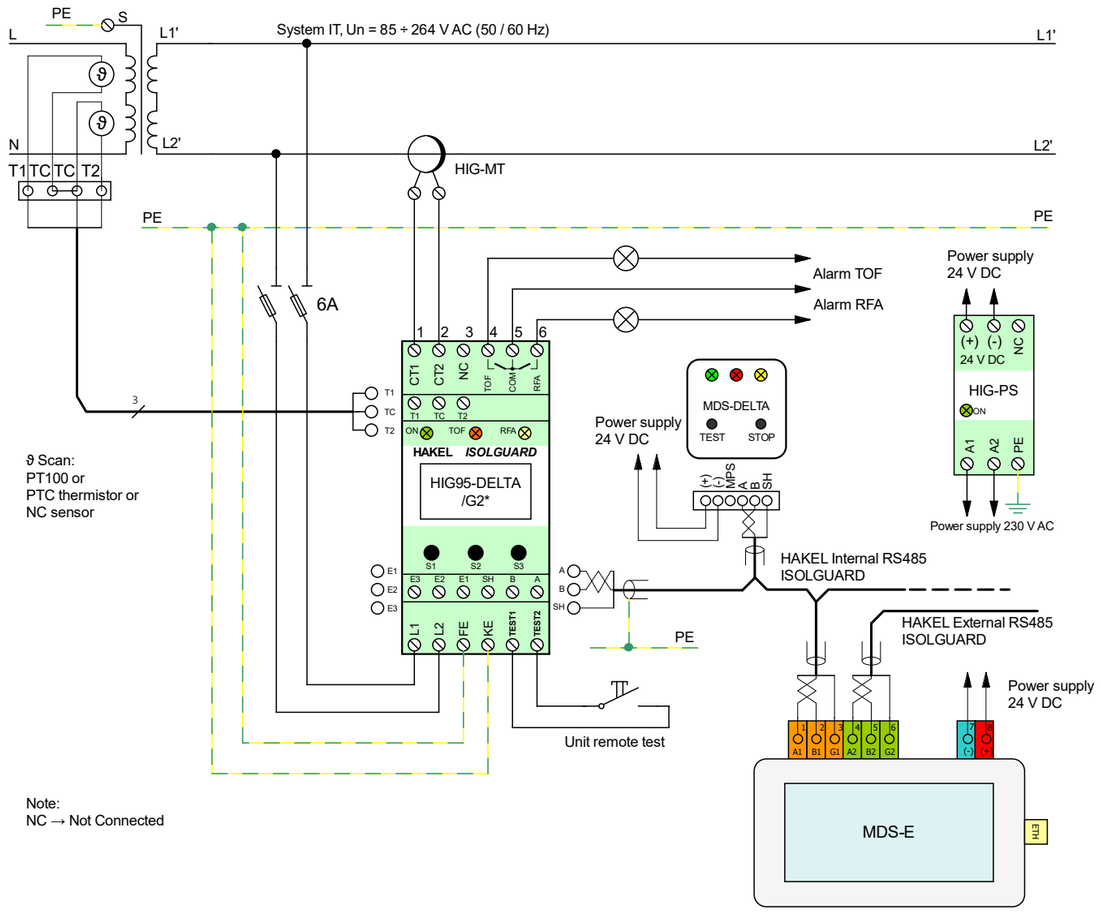

Note:
NC → Not Connected